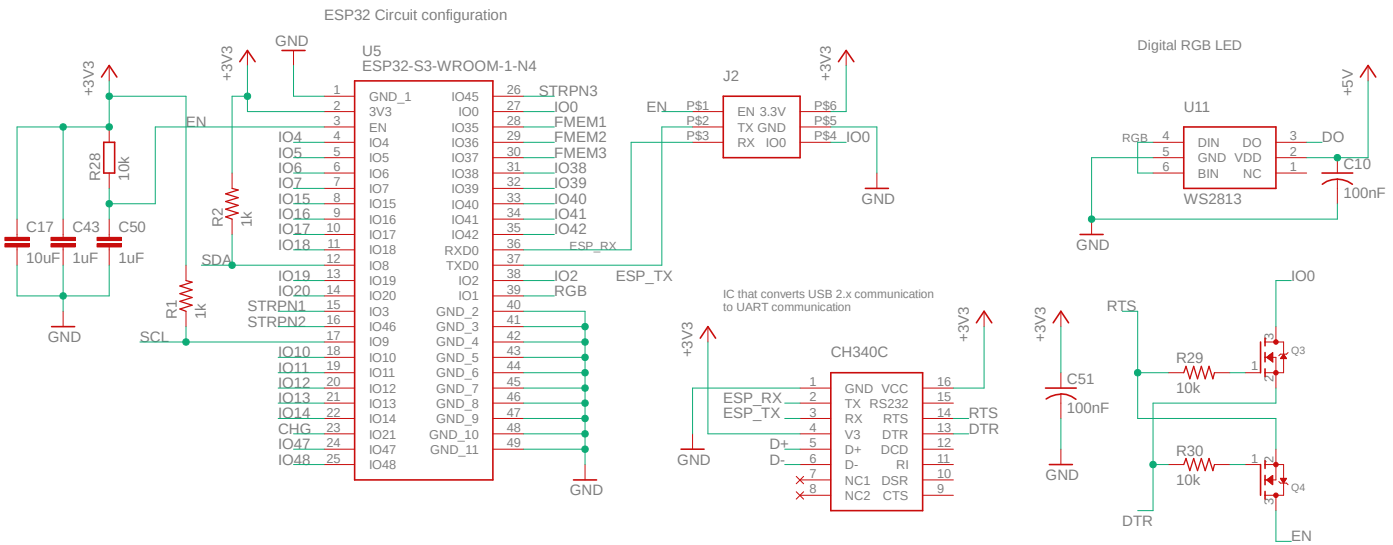
ESP32 Circuit configuration
U5
ESP32-S3-WROOM-1-N4
GND_1
3V3
EN
IO4
IO5
IO6
IO7
IO15
IO16
IO17
IO18
IO8
IO19
IO20
IO3
IO46
IO9
IO10
IO11
IO12
IO13
IO14
IO21
IO47
IO48
IO45
IO0
IO35
IO36
IO37
IO38
IO39
IO40
IO41
IO42
RXD0
TXD0
IO2
IO1
GND_2
GND_3
GND_4
GND_5
GND_6
GND_7
GND_8
GND_9
GND_10
GND_11
STRPN3
FMEM1
FMEM2
FMEM3
IO38
IO39
IO40
IO41
IO42
ESP_RX
ESP_TX
IO2
RGB
STRPN1
STRPN2
IO10
IO11
IO12
IO13
IO14
CHG
IO47
IO48
+3V3
GND
EN
SDA
SCL
R28
10k
R2
1k
R1
1k
C17
10uF
C43
1uF
C50
1uF
J2
EN 3.3V
TX GND
RX IO0
P$1
P$2
P$3
P$6
P$5
P$4
IO0
IC that converts USB 2.x communication
to UART communication
CH340C
GND VCC
TX RS232
RX RTS
V3 DTR
D+ DCD
D- RI
NC1 DSR
NC2 CTS
ESP_RX
ESP_TX
D+
D-
RTS
DTR
C51
100nF
Digital RGB LED
U11
DIN DO
GND VDD
BIN NC
WS2813
RGB
DO
C10
100nF
+5V
IO0
RTS
R29
10k
R30
10k
Q3
Q4
DTR
EN

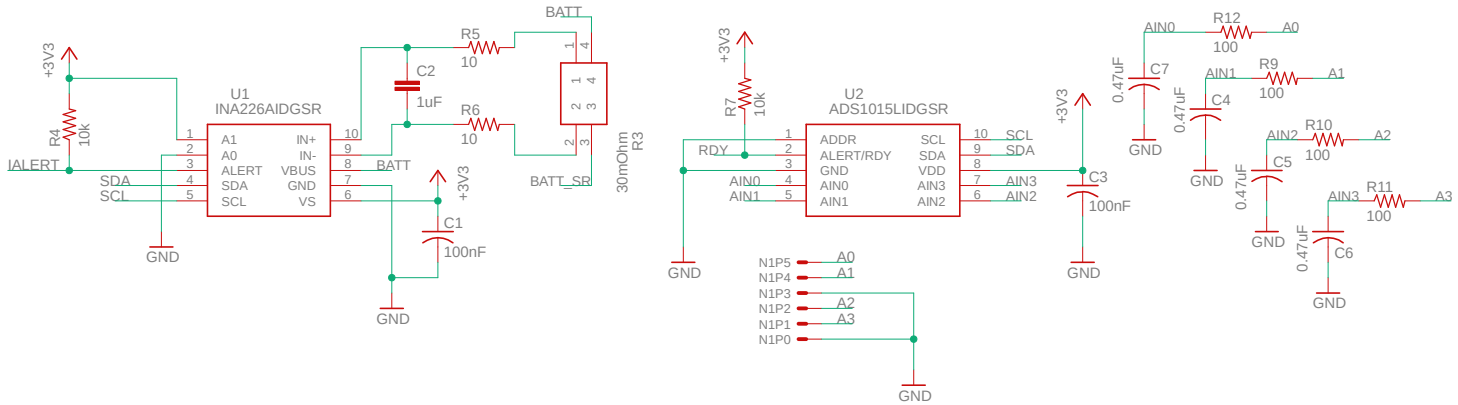
+3V3
R4
10k
IALERT
SDA
SCL
GND
U1
INA226AIDGSR
A1
A0
ALERT
SDA
SCL
IN+
IN-
VBUS
GND
VS
BATT
C2
1uF
R5
10
R6
10
BATT
BATT_SR
30mOhm
R3
+3V3
C1
100nF
GND
+3V3
R7
10k
RDY
AIN0
AIN1
U2
ADS1015LIDGSR
ADDR
ALERT/RDY
GND
AIN0
AIN1
SCL
SDA
VDD
AIN3
AIN2
SCL
SDA
AIN3
AIN2
+3V3
C3
100nF
GND
N1P5
N1P4
N1P3
N1P2
N1P1
N1P0
A0
A1
A2
A3
GND
AIN0
R12
100
A0
0.47uF
C7
GND
AIN1
R9
100
A1
0.47uF
C4
GND
AIN2
R10
100
A2
0.47uF
C5
GND
AIN3
R11
100
A3
0.47uF
C6
GND

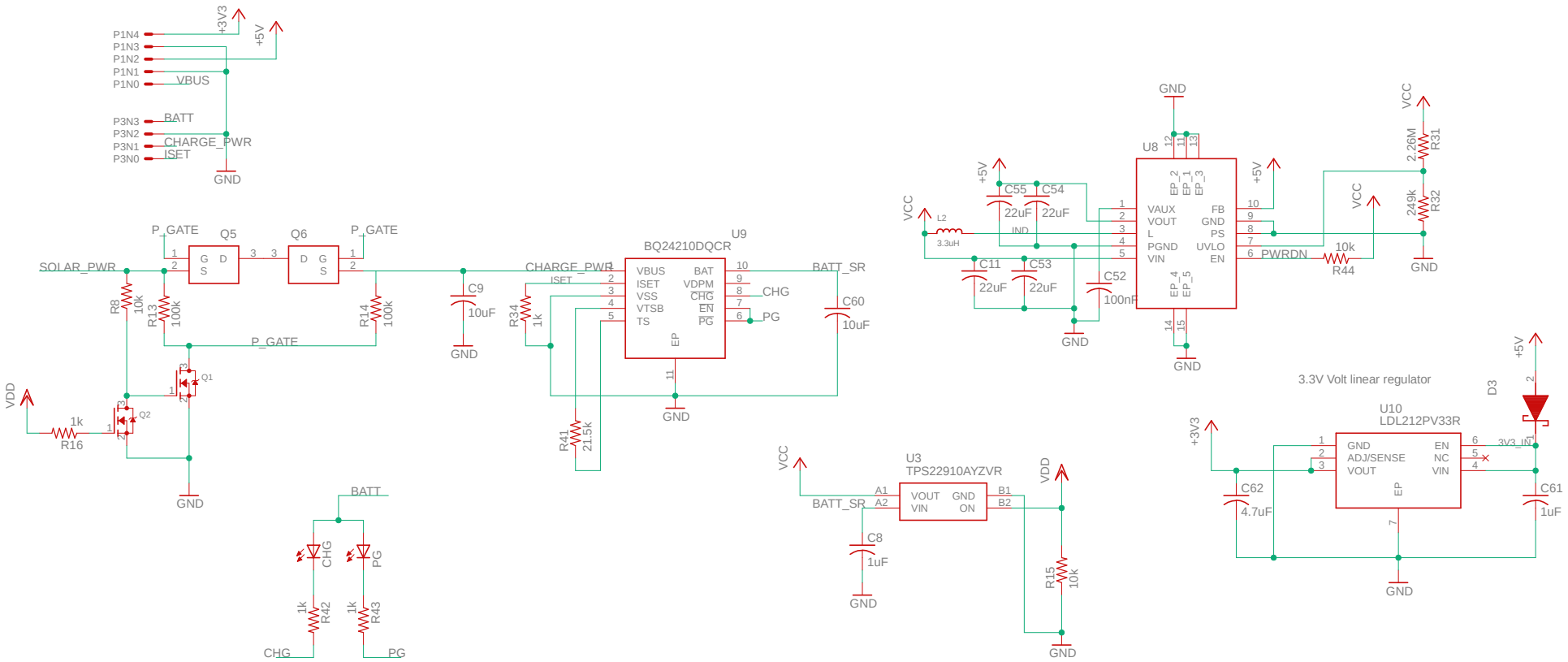


6/29/2026 1:26 PM f=0.80 C:\Users\neilf\OneDrive\Documents\EAGLE\projects\Precision_AD_Designs\Open Source Design Files\AIoT_SenseNode_OS_V1\AIoT_SenseNode_

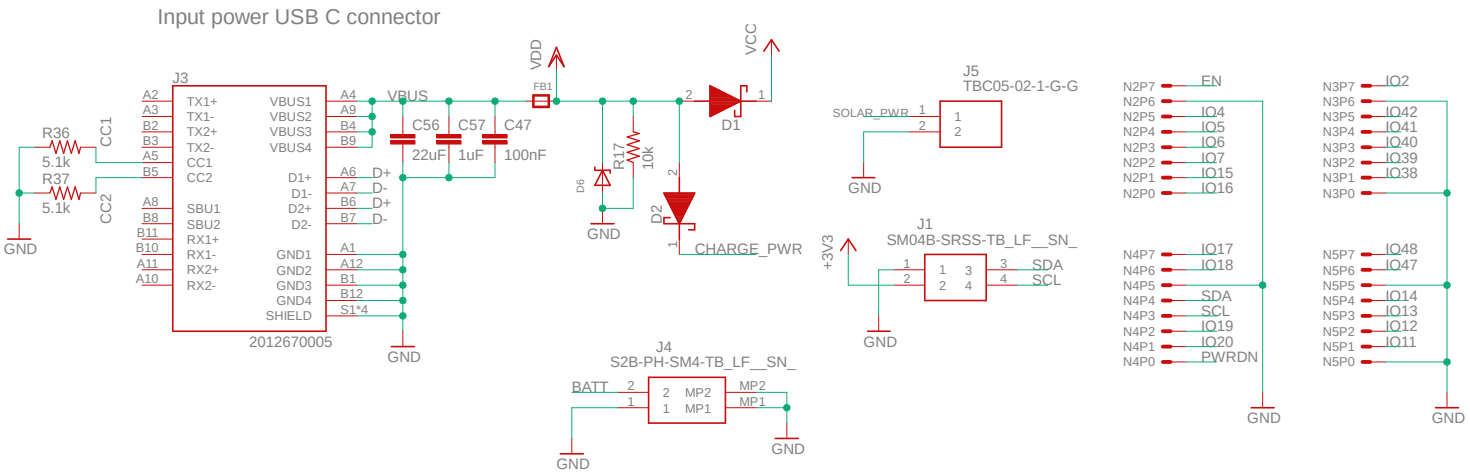
Input power USB C connector
J3
2012670005
TX1+
TX1-
TX2+
TX2-
CC1
CC2
SBU1
SBU2
RX1+
RX1-
RX2+
RX2-
VBUS1
VBUS2
VBUS3
VBUS4
D1+
D1-
D2+
D2-
GND1
GND2
GND3
GND4
SHIELD
A2
A3
B2
B3
A5
B5
A8
B8
B11
B10
A11
A10
A4
A9
B4
B9
A6
A7
B6
B7
A1
A12
B1
B12
S1*4
D+
D-
D+
D-
R36
5.1k
R37
5.1k
CC1
CC2
GND
VBUS
C56
22uF
C57
1uF
C47
100nF
GND
VDD
FB1
D6
R17
10k
GND
D2
CHARGE_PWR
D1
VCC
J5
TBC05-02-1-G-G
SOLAR_PWR
GND
J1
SM04B-SRSS-TB_LF__SN_
+3V3
SDA
SCL
GND
J4
S2B-PH-SM4-TB_LF__SN_
BATT
MP2
MP1
GND
GND
N2P7
N2P6
N2P5
N2P4
N2P3
N2P2
N2P1
N2P0
EN
IO4
IO5
IO6
IO7
IO15
IO16
N4P7
N4P6
N4P5
N4P4
N4P3
N4P2
N4P1
N4P0
IO17
IO18
SDA
SCL
IO19
IO20
PWRDN
GND
N3P7
N3P6
N3P5
N3P4
N3P3
N3P2
N3P1
N3P0
IO2
IO42
IO41
IO40
IO39
IO38
N5P7
N5P6
N5P5
N5P4
N5P3
N5P2
N5P1
N5P0
IO48
IO47
IO14
IO13
IO12
IO11
GND